# FB8SG

## DATI DELLE PRESTAZIONI
PERFORMANCES' DATA
DONNÉES DES PERFORMANCES

| Tipo<br>Type<br>Type | Motore<br>Motors 2900 g/m<br>Moteurs | | Q = Portata - Capacity - Débit | | | | | | | | | |
|---|---|---|---|---|---|---|---|---|---|---|---|---|
| | | | l/sec | 0 | 13,9 | 16,7 | 19,5 | 22,2 | 25 | 27,8 | 30,6 | 33,3 |
| | Cv<br>Hp | Kw | **l/min** | **0** | **833** | **1000** | **1167** | **1333** | **1500** | **1667** | **1833** | **2000** |
| | | | mc/h | 0 | 50 | 60 | 70 | 80 | 90 | 100 | 110 | 120 |
| **FB8SG/1A + 6F7** | 7,5 | 5,5 | H(m) | 26 | 20 | 19 | 18 | 16 | 15 | 14 | 12 | 9 |
| **FB8SG/2L + 6F10** | 10 | 7,5 | | 42 | 32 | 29 | 27 | 24 | 22 | 18 | 13 | 9 |
| **FB8SG/2F + 6F12** | 12,5 | 9,2 | | 48 | 37 | 35 | 32 | 29 | 27 | 23 | 19 | 14 |
| **FB8SG/2A + 6F15** | 15 | 11 | | 51 | 40 | 38 | 35 | 33 | 30 | 27 | 23 | 18 |
| **FB8SG/3G + 6F17** | 17,5 | 13 | | 68 | 53 | 49 | 45 | 41 | 36 | 31 | 24 | 17 |
| **FB8SG/3D + 6F20** | 20 | 15 | | 76 | 57 | 54 | 50 | 47 | 43 | 38 | 32 | 24 |
| **FB8SG/3A + 6F25** | 25 | 18,5 | | 79 | 62 | 58 | 54 | 50 | 47 | 42 | 36 | 28 |
| **FB8SG/4A + 6F30** | 30 | 22 | | 106 | 83 | 78 | 73 | 68 | 63 | 56 | 48 | 38 |
| **FB8SG/5A + 6F35** | 35 | 26 | | 134 | 105 | 99 | 92 | 86 | 79 | 71 | 61 | 48 |
| **FB8SG/6D + 8F40** | 40 | 30 | | 156 | 119 | 111 | 103 | 96 | 88 | 78 | 66 | 50 |
| **FB8SG/7A + 8F50** | 50 | 37 | | 189 | 148 | 139 | 130 | 121 | 112 | 101 | 86 | 68 |
| **FB8SG/8A + 8F60** | 60 | 45 | | 216 | 170 | 159 | 149 | 138 | 128 | 115 | 98 | 78 |
| **FB8SG/9A + 8F70** | 70 | 51 | | 243 | 191 | 180 | 167 | 156 | 144 | 129 | 111 | 86 |
| **FB8SG/10A + 8F75** | 75 | 55 | | 270 | 212 | 199 | 186 | 173 | 160 | 144 | 123 | 97 |
| **FB8SG/11A + 8F80** | 80 | 59 | | 297 | 233 | 219 | 204 | 190 | 176 | 157 | 135 | 105 |
| **FB8SG/12A + 8F85*** | 85 | 62 | | 324 | 254 | 239 | 223 | 208 | 192 | 173 | 148 | 116 |
| **FB8SG/13D + 8F90*** | 90 | 66 | | 348 | 260 | 247 | 228 | 215 | 195 | 176 | 150 | 111 |
| **FB8SG/14A + 8F100*** | 100 | 75 | | 378 | 297 | 279 | 260 | 242 | 224 | 202 | 272 | 136 |

## Dimensioni e pesi
Overall dimensions and weights - Dimensions d'encombrement et poids

| Tipo<br>Type<br>Type | Cv<br>Hp | Kw | A<br>(mm) | B<br>(mm) | C<br>(mm) | D<br>(mm) | ø max<br>(mm) | DN | Peso - Weight - Poids<br>A (kg) | B (kg) | C (kg) |
|---|---|---|---|---|---|---|---|---|---|---|---|
| **FB8SG/1A + 6F7** | 7,5 | 5,5 | 1231 | 604 | 627 | 145 | 198 | G 5" | 88 | 42 | 46 |
| **FB8SG/2L + 6F10** | 10 | 7,5 | 1403 | 736 | 667 | | | | 102 | 52 | 50 |
| **FB8SG/2F + 6F12** | 12,5 | 9,2 | 1433 | 736 | 697 | | | | 106 | 52 | 54 |
| **FB8SG/2A + 6F15** | 15 | 11 | 1503 | 736 | 767 | | | | 113 | 52 | 61 |
| **FB8SG/3G + 6F17** | 17,5 | 13 | 1635 | 868 | 767 | | | | 124 | 62 | 62 |
| **FB8SG/3D + 6F20** | 20 | 15 | 1695 | 868 | 827 | | | | 130 | 62 | 68 |
| **FB8SG/3A + 6F25** | 25 | 18,5 | 1765 | 868 | 897 | | | | 137 | 62 | 75 |
| **FB8SG/4A + 6F30** | 30 | 22 | 1967 | 1000 | 967 | | | | 154 | 72 | 82 |
| **FB8SG/5A + 6F35** | 35 | 26 | 2159 | 1132 | 1027 | | | | 171 | 82 | 89 |
| **FB8SG/6D + 8F40** | 40 | 30 | 2341 | 1292 | 1049 | 192 | | | 233 | 95 | 138 |
| **FB8SG/7A + 8F50** | 50 | 37 | 2543 | 1424 | 1119 | | | | 258 | 105 | 153 |
| **FB8SG/8A + 8F60** | 60 | 45 | 2785 | 1556 | 1229 | | | | 286 | 115 | 171 |
| **FB8SG/9A + 8F70** | 70 | 51 | 2917 | 1688 | 1229 | | | | 297 | 125 | 172 |
| **FB8SG/10A + 8F75** | 75 | 55 | 3169 | 1820 | 1349 | | | | 319 | 135 | 184 |
| **FB8SG/11A + 8F80** | 80 | 59 | 3301 | 1952 | 1349 | | | | 329 | 145 | 184 |
| **FB8SG/12A + 8F85*** | 85 | 62 | 3433 | 2084 | 1349 | | | | 339 | 155 | 184 |
| **FB8SG/13D + 8F90*** | 90 | 66 | 3635 | 2216 | 1419 | | | | 370 | 165 | 205 |
| **FB8SG/14A + 8F100*** | 100 | 75 | 3957 | 2348 | 1609 | | | | 411 | 175 | 236 |

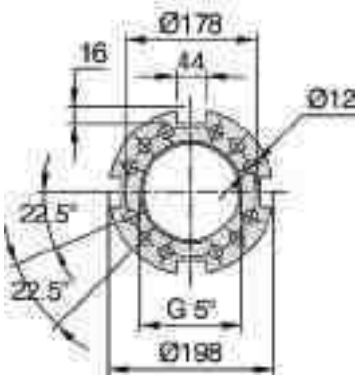


* **Non consigliata per montaggio in posizione orizzontale**
* This electropump isn't recommended for horizontal assemblage
* Cette électropompe n'est pas recommandée pour le montage en position horizontale

Tolleranze secondo EN ISO 9906 app.A Gr.2 - Tolerances according to EN ISO 9906 anx.A Gr.2 - Tolérances conformes EN ISO 9906 ann.A Gr.2

# CURVE DELLE PRESTAZIONI

PERFORMANCES' CURVES

COURBES DES PERFORMANCES

## n=2900 1/min 50 Hz

# FB8SG

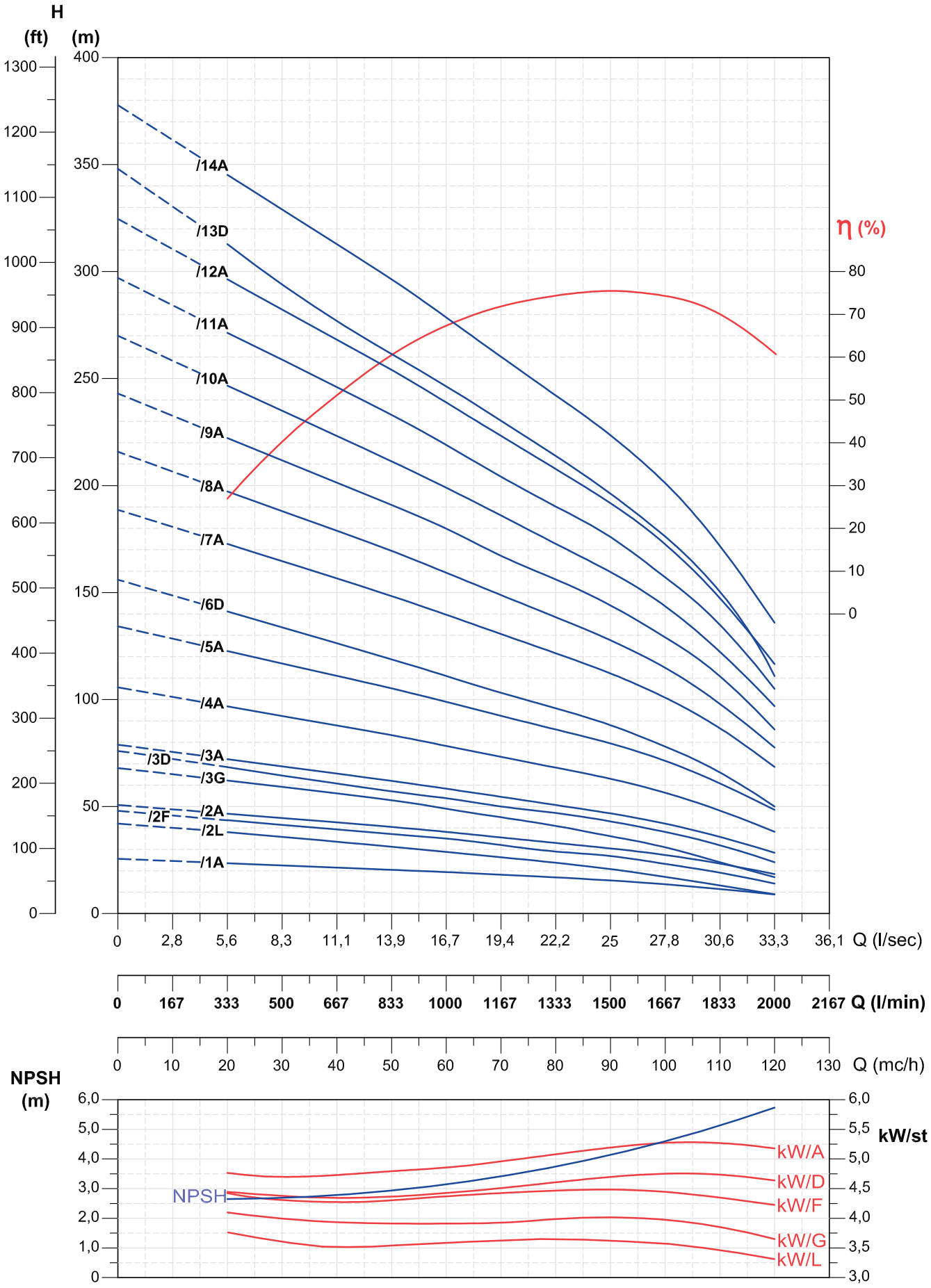


Tolleranze secondo EN ISO 9906 app.A Gr.2 - Tolerances according to EN ISO 9906 anx.A Gr.2 - Tolérances conformes EN ISO 9906 ann.A Gr.2